White Paper

Implementing LED Drivers In MAX Devices

Introduction

Discrete light-emitting diode (LED) driver chips are common on many system boards. Altera® MAX® 7000B, MAX 7000A, MAX 3000A, and MAX 7000S devices offer unique capabilities that allow designers to integrate single or multiple LED driver chips into a single device. This white paper explains how to implement LED drivers in MAX devices.

Commercial LED Driver Chips

Many LEDs, like the 7-segment display, are common-anode LEDs. The LED's anode connects to V_{CC} and the cathodes are each connected to an output pin of the current-sinking LED driver chip. The driver chip sinks the DC current required to drive the display, and the LED is turned on when the driver chip's output pins are pulled low. Current-regulating circuits are implemented inside the LED driver chips.

Current-sinking LED drivers are more common than current-sourcing drivers. Table 1 lists some common LED driver chips manufactured by Texas Instruments, National Semiconductor, and Toshiba. More information about specific LED driver chips can be found in the datasheets provided by the respective manufacturers.

Table 1. Current-Sinking LED Driver Chips

LED Driver Chip	Description
TI TLC5905	LED driver with shift registers, data latch, and constant current circuitry
TI TLC5910	LED driver with shift registers, data latch, on-chip PLL for gray scale generation, and constant current
TI TLC5911	LED driver with shift registers, data latch, on-chip PLL for gray scale generation, and constant current
TI TLC5921	LED driver with shift register, data latch, and current-sink constant current circuitry
National DS8874	9-digit shift input LED driver
National DS8863	MOS-to-LED 8-digit driver
National DS8963	MOS-to-LED 8-digit driver
Toshiba TB62701AN	16-bit constant current LED driver with shift register and latch functions
Toshiba TB62705	8-bit constant current LED driver with shift register and latch functions
Toshiba TB62706	16-bit constant current LED driver with shift register and latch functions
Toshiba TB62707	8-bit constant current LED driver with latch functions

Implementing LED Drivers in MAX Devices

When a MAX device is used as an LED driver chip, a current-limiting resistor is placed between the cathode side of the LED's diode and the MAX device's I/O. The LED is tied to the V_{CC}, and is turned on when the MAX device's I/O is pulled low.

The most important aspect of an LED driver chip is the amount of current it has to sink. Many LED applications call for a current sink specification of 5 to 15 mA. Because MAX 7000B, MAX 7000A, MAX 3000A, and MAX 7000S devices can sink up to 50 mA per pin, these MAX device families can directly integrate commercial current-sinking LED driver chips. Table 2 shows the maximum sink current per pin for MAX devices.

Table 2. Maximum Sink Current for MAX Devices

MAX Device	Maximum Sink Current Per Pin	Unit
MAX 7000S	25	mA
MAX 7000A	25	mA
MAX 7000B	50	mA
MAX 3000A	25	mA

Even though a single pin from a MAX 7000B device can sink up to 50 mA of DC current, each `IOGND` group can concurrently sink up to 200 mA of current due to the support of advanced I/O standards. The Device Pin-Outs section of the *MAX 7000B Programmable Logic Device Family Data Sheet* specifies the `IOGND` groupings of I/Os. For more information about the current sinking capabilities of the MAX devices, refer to the respective data sheets.

Implementing LED Driver Chips

Figure 1 shows an example of an application circuit with the TB62701AN, Toshiba's 16-bit constant current LED driver with shift registers and latch functions. The 16 outputs of the circuit sink current for two 7-segment displays. A designer can implement the LED driver chip in the circuitry using only one MAX device, provided the device has enough register and pin capabilities to replace the functionality of the entire LED driver chip.

Figure 1. Application Circuit Example

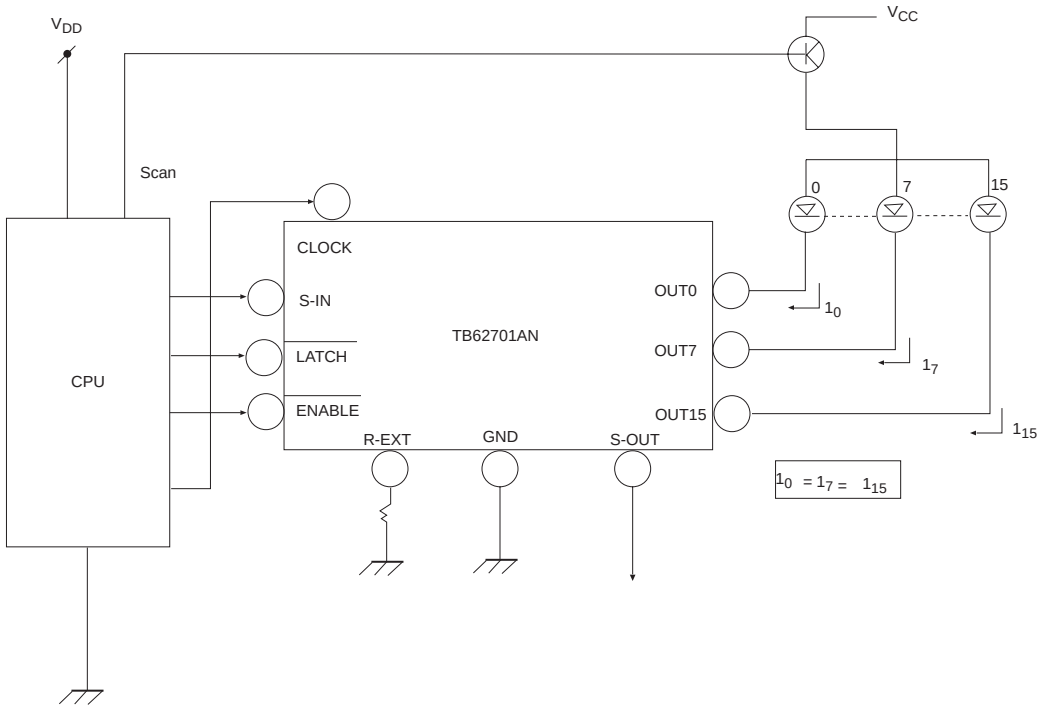

Figure 2 shows a block diagram of the TB62701AN. To emulate the functioning of the TBN62701AN, a designer needs 32 registers for the latches, flip-flops, and at least three input pins (clock, serial input, and latch) and 17 output pins (the serial output and the 16 LED outputs) for a total of 20 I/O pins. An extra input pin and 16 extra registers for the AND gates are also required for implementing the enable function.

Figure 2. Block Diagram of TB62701AN

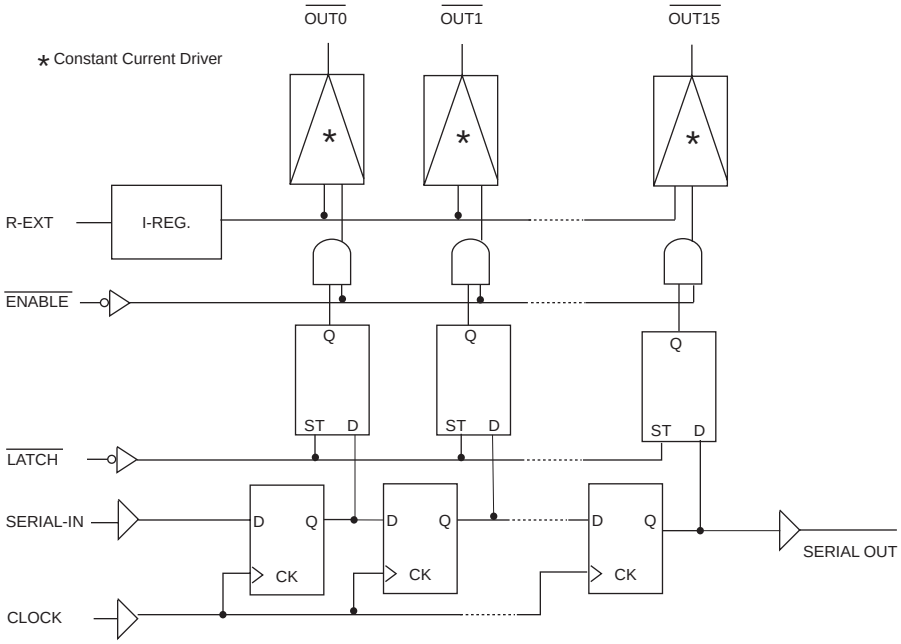

To integrate the entire circuit in one MAX device, a designer must choose a device that has at least 20 I/O pins and 32 registers. The smallest MAX 7000A device that can satisfy the requirements is the EPM7032AE device, with 32 registers (macrocells) and a maximum of 34 user I/O pins. However, to also implement the enable function, the smallest MAX 7000A device required would be the EPM7064AE device with 64 registers (macrocells) and a maximum of 68 I/O pins.

The external resistor(R-EXT) and the current-regulating circuit have to be replaced with individual current-limiting resistors placed between the cathode side of the LED's diodes and the I/Os of the MAX device. Figure 3 shows the implementation of the LED driver using a MAX device.

Figure 3. Implementing the LED Driver Using a MAX Device

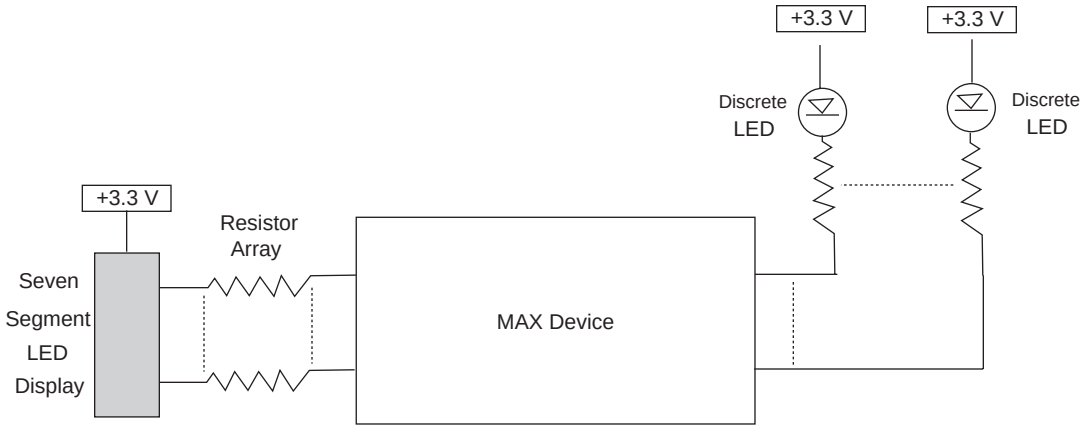

The right hand side of Figure 3 shows the connection between discrete LEDs and the I/Os of a MAX device, while the left hand side shows the connection between a 7-segment LED and the MAX device. The output pins of the MAX device connected to the LEDs are pulled low to turn on the LEDs.

Advantages

The major advantage of implementing LED drivers with MAX devices is that MAX devices can also integrate other user logic using their programmable logic. If user logic has to be implemented on the same board as the LED driver, additional devices are required if a commercial LED driver chip is used. If a MAX device is used, however, additional chips would not be required, saving valuable board space and reducing the overall system cost.

Conclusion

Altera's MAX devices not only provide solutions to the communications and industrial fields, but also offer simple solutions to integrate commodity products such as LED drivers. MAX devices can integrate LED drivers and provide user logic, which saves on board space and reduces overall system cost.

101 Innovation Drive
San Jose, CA 95134
(408) 544-7000
http://www.altera.com